9461
Specifications Sheet

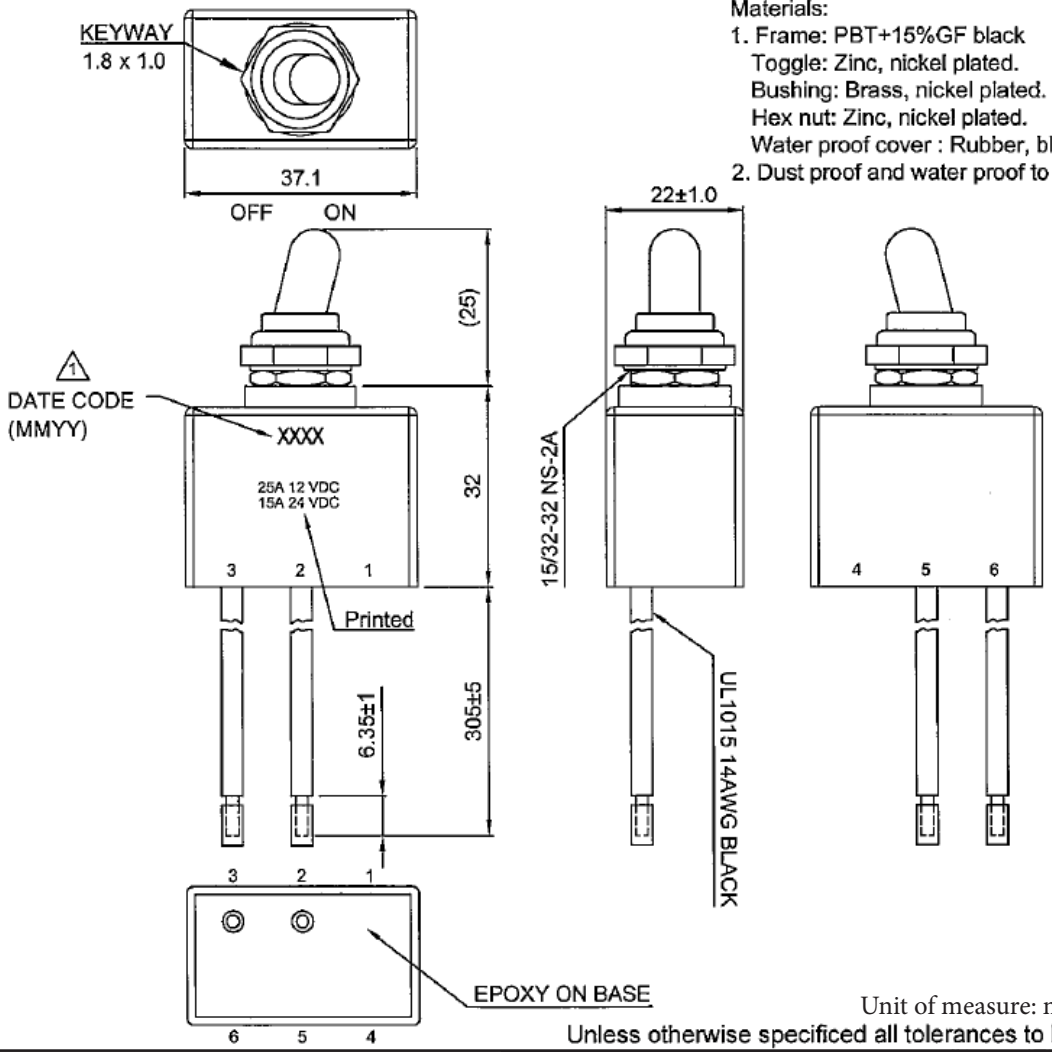

Materials:
1. Frame: PBT+15%GF black
   Toggle: Zinc, nickel plated.
   Bushing: Brass, nickel plated.
   Hex nut: Zinc, nickel plated.
   Water proof cover : Rubber, black.
2. Dust proof and water proof to fit IP-67.

Unit of measure: mm
Unless otherwise specificed all tolerances to be ±0.3.

Specifications	
Rating	25A 12VDC
	15A 24VDC
Contact Resistance	50m ohm Max.
Insulation Resistance	DC 500V 100M ohm Min.
Dielectric Strength	AC 1500V 1 minute
Operation Temperature	-40° to 85°
Switch Function	4P DPST OFF-ON
Operation Force	600gf±250gf

Mounting

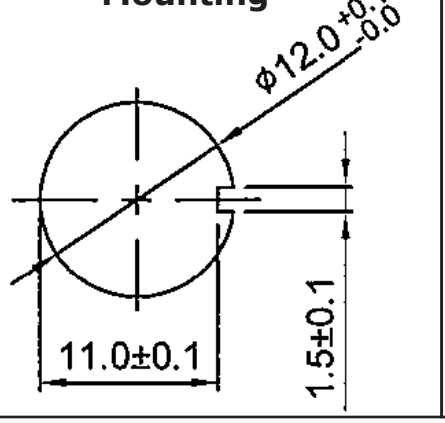
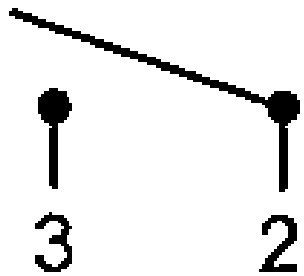
Circuitry