9540-9544
Specifications Sheet

Outline Drawings

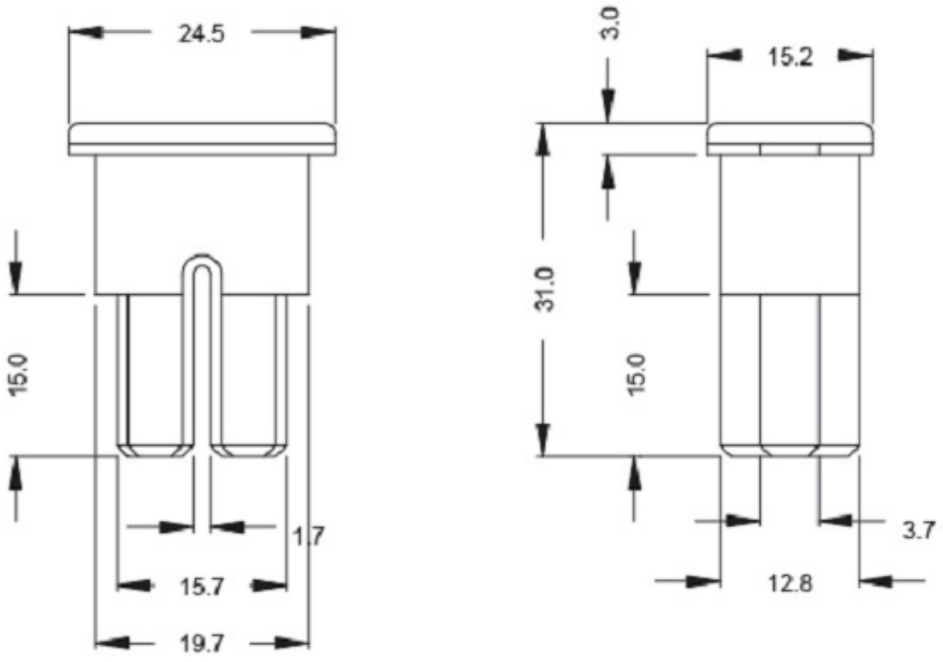

Unit of measure: mm
Tolerance ± 0.2

Time Current Characteristics

Rating	Blow Time
110%	4hrs
200%	1.5 ~ 100s
300%	0.5 ~ 15s

Description

Part #	Amp	Colours
9540-11	20	White
9541-11	30	Pink
9542-11	40	Green
9543-11	50	Red
9544-11	60	Yellow

General Specifications

- Fuse Type: Female Japanese Car Fuse Link Terminations
- Fuse Element Material: Copper
- Voltage Rating: 32V DC
- Fuses are colour coded for easy amperage identification
- Standard: JASO D614

RoHS